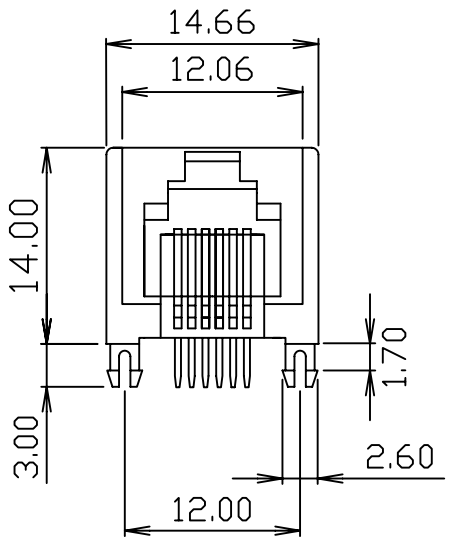

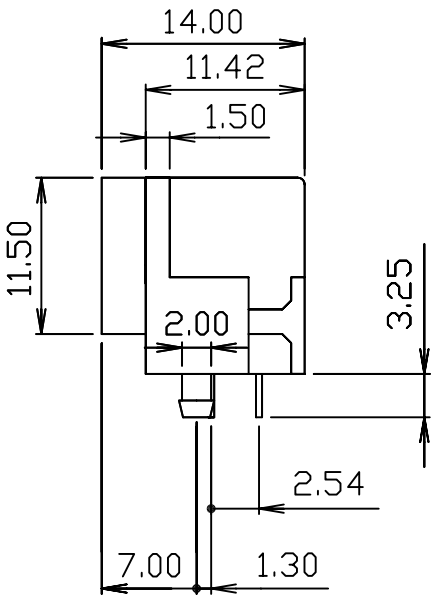

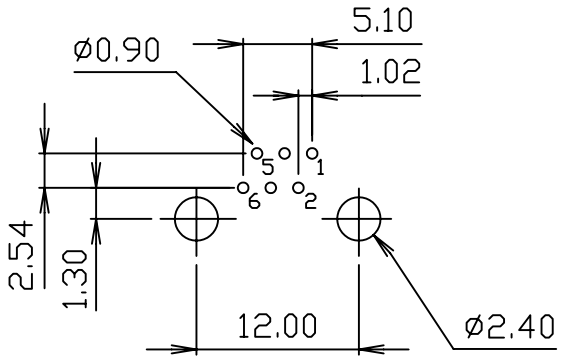

SUGGESTED PCB LAYOUT
TOP VIEW

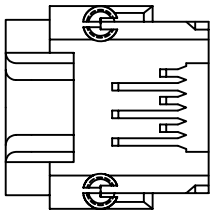

XRJM-U-01-6-6-0-9H1

- M-[Thru Hole]
- U — Shielded Plating Type
- 01 — NO. OF PORTS
- 6 — NO. OF POSITION
- 6 — NO. OF CONTACT
- 0 — LED COLOR OPTION
- 9 — RUNNING CODE
- H — SERIAL NUMBER
- 1 — CONTACT PLATING WITH GOLD

Shielded Plating Type	
S	SHIELDED
U	Unshielded

NOTES:

1. MATERIALS:

- HOUSING-PBT POLYESTER UL94V-0
  MIXED GLASS FIBER.
  STANDARD COLOR-BLACK
- CONTACTS-0.45mm DIA. ROUND PHOS-BRONZE
  PLATED WITH 15u" GOLD.

2. CAVITY CONFIRMS TO FCC RULES AND REGULATIONS PART 68,SUBPART F.
3. UNSPECIFIED TOLERANCE: .XX ±0.25[0.010]
   .X ±0.30[0.012]

RoHS Compliant

XMULTIPLE — CONNECTING THE INFORMATION AGE

XMULTIPLE ASIA
4F, No. 347,Yang Guang St.,
Neihu Chiu , Taipei , Taiwan 11475

XMULTIPLE USA
1420 Los Angeles Ave., Suite G,
Simi Valley, CA 93065

THIS DRAWING IS A CONTROLLED DOCUMENT.

TITLE: RJ11 Connectors, W/O LED, 6P,6C, UnShielded, Thru-Hole

PART NO: XRJM-U-01-6-6-0-9H1

UNIT	SHEET	REV
mm[inch]	1 of 1	01

G/NO:
DWG NO: XRJM-U-01-6-6-0-9H1
DRAWN: RUNES
CHKD: JEFF
DATE: Jan.17,06