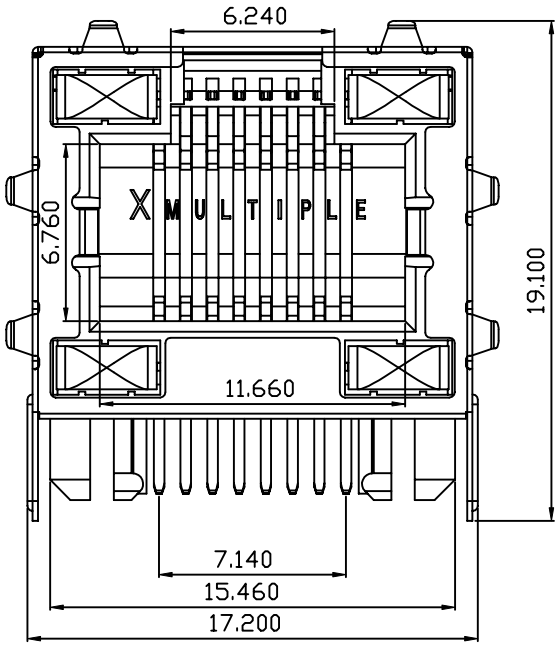

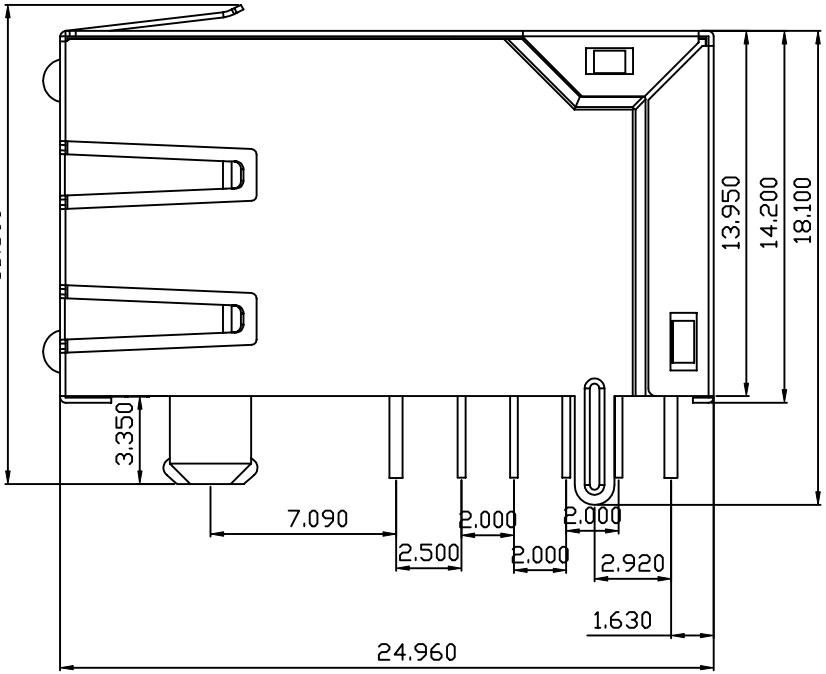

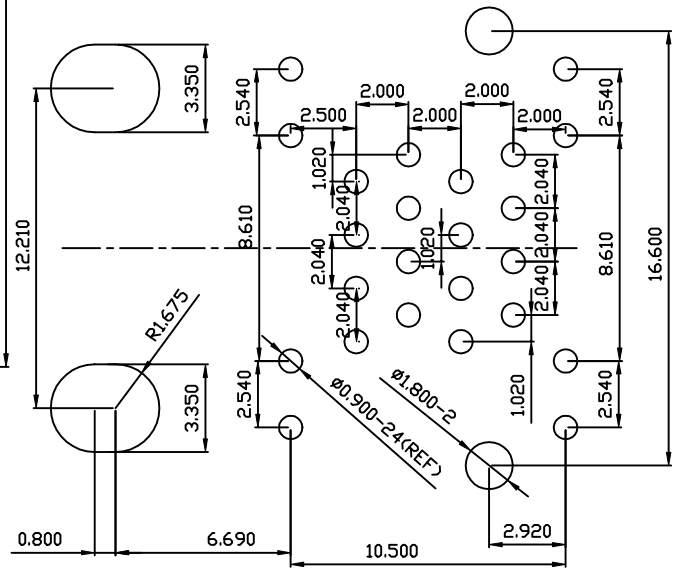

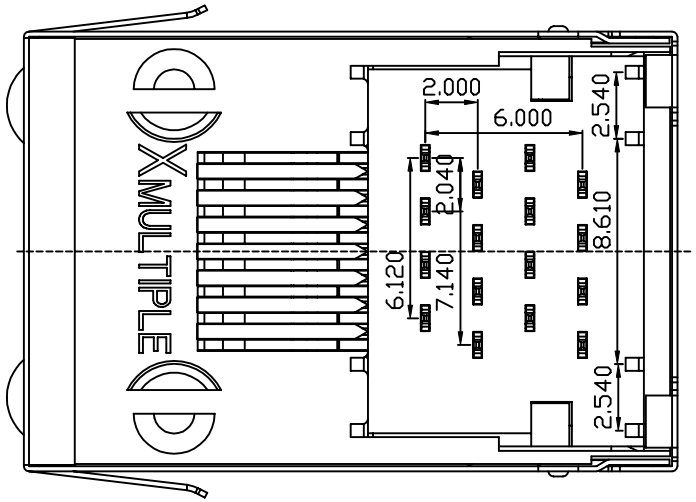

SUGGESTED PCB LAYOUT

XMULTIPLE			CONNECTING THE INFORMATION AGE
XMULTIPLE ASIA 3F, No. 60,Juluen St., Taipei, 104, Taiwan. R.O.C.	XMULTIPLE USA 3555 Old Conejo Road Newbury Park, CA 91320		G/NO:
THIS DRAWING IS A CONTROLLED DOCUMENT.			DWG NO:
TITLE: ULTRAJAX 1 PORT FEMALE CONNECTOR			DRAWN: Y. Chen
PART NO: ULTRAJA-S-11-8-8-X			CHKD: C. TSAI
DIMENSIONS	SHEET	REV	DATE: 04/30/02
mm	1 of 1	A0	